FORMEC 2016
From Theory to Practice: Challenges for Forest Engineering
September 4 – 7, 2016, Warsaw, Poland

New delimbing tool for hardwood trees: feedback on new ribbed knives after one year experience

Emmanuel CACOT, Jean-Christophe Fauroux, David Peuch, Alain Bouvet, Mahmoud Chakroun
emmanuel.cacot@fcba.fr

Challenges and context

- **2 main challenges:**
  - **To harvest +12 Mm^3/year by 2025 (80% of available resources = broadleaved species)**
  - **To counteract the decrease of manual workforce: - 400 lumberjacks/year during the last decade**
- **Hardwood mechanization in France to date:**
  - **10% of volume felled and processed with CTL harvesters (80% for softwood), 54 full time equivalent harvesters**
  - **Average annual productivity: 14,000 m^3/CTL harvester/year**
  - **Expectations from harvester operators:**
    - Harvesters are now more powerful but need yet to be adapted to hardwood's typical characteristics (branchiness, crookedness…), which still hinder productivity
    - Less selection of stands that can be mechanized (straight trees, small branches…) would enhance utilization rate of harvesters and facilitate global organization

ECOMEF project and methodology

- **ECOMEF: Eco-design of a mechanized tool for hardwood harvesting**
- **Objective: to develop a hardwood-dedicated harvesting head**
- **Methodology:**
  - **Mains problems listed and ranked:**
    1. Delimbing
    2. Feeding process
    3. Grabbing trees in clumps
  - **Brainstorming to imagine new concepts**
  - **Design and tests in laboratory**
  - **Real field tests**
  - **Preparation for industrialization**

Selection of the most promising concepts

Example for new delimbing knives

FCBA

INSTITUT
TECHNOLOGIQUE

Design and test of ribbed blades in laboratory

Design of ribbed knives

- **Contradiction:**
  - The blade should be thin to minimize delimbing force...
  - and thick to avoid destruction due to extreme bending
- **How to decrease cross-section area while increasing quadratic moment?**

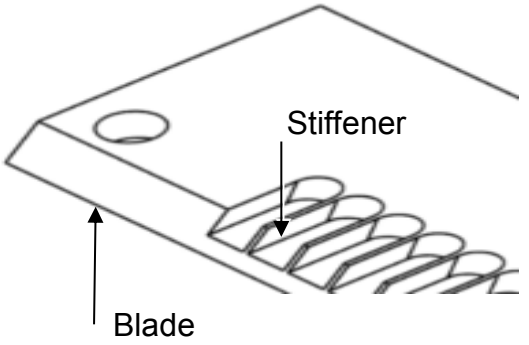

⇒ **<u>Solution:</u> Additional ribs used as stiffeners are spaced regularly**

- **Make use of wood anisotropy:**
  - The blade's edge cuts wood fibers
  - The stiffeners cross between the fibers with minor increase of delimbing force

Tests of various ribbed knives with delimbing test benches (1/2)

- **Different dimensional parameters influence cutting force and blade resistance:**
  - **β, sharpness angle**
  - **th_b, blade thickness**
  - **l_r, rib depth**
  - **th_k, knife thickness**
  - **d_r, distance between ribs**
  - **th_r, rib thickness**

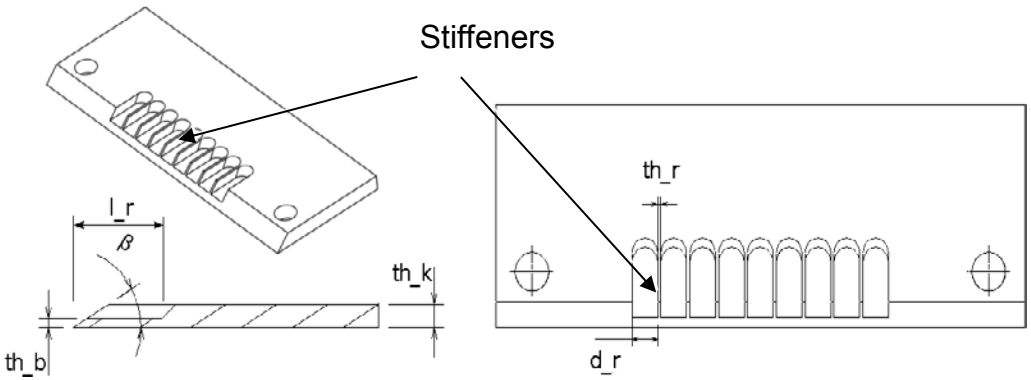

- **1st step: finite element simulations to determine the 9 best performing configurations**
- **2nd step: test of these 9 best configurations with benches (ex. right)**

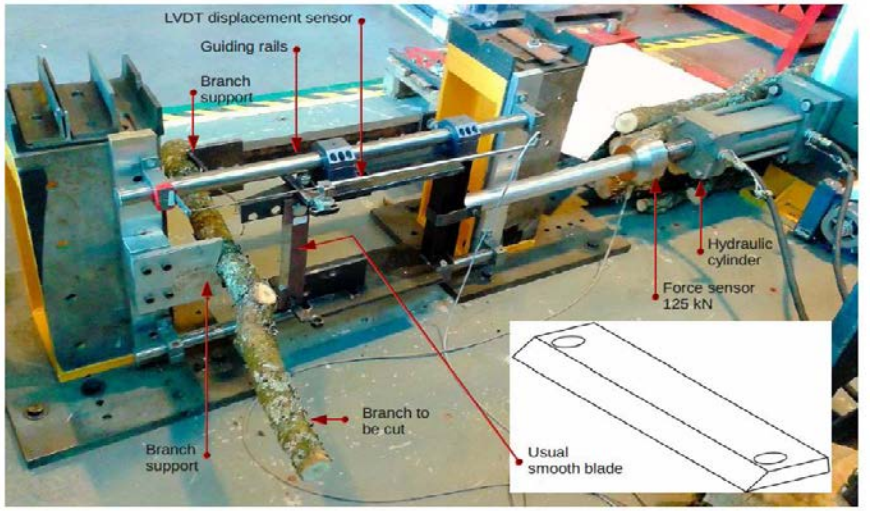

Tests of various ribbed knives with delimbing test benches (2/2)

- **Main results:**
  - 30° sharpness angle (β) seems to be a good compromise between cutting forces and blade resistance
  - The thinner the blade, the lower the max. cutting forces
  - Thickness th_b = 3mm is not rigid enough
  - + 1 - 2 mm thickening of ribs increases cutting forces
  - Little influence from height of the ribs

Knife name th_k - th_b - th_r	Knife thickness th_k (mm)	Blade thickness th_b (mm)	Rib thickness th_r (mm)	Maximal cutting force (kN)
1. **Smooth** 8 mm	8	/	/	30
2. Ribbed 8-3-2	8	3	2	26,9
3. **Smooth** 10	10	/	/	32,9
4. Ribbed 10-3-1	10	3	1	26,3
5. Ribbed 10-3-2	10	3	2	25,6
6. Ribbed 10-5-2	10	5	2	27,4
7. **Smooth** 12	12	/	/	32,4
8. Ribbed 12-5-2	12	5	2	25,9
9. Ribbed 12-7-2	12	7	2	30,2

Branch diameter 80mm, β = 30°, l_r = 40mm, d_r = 16mm

First short field tests

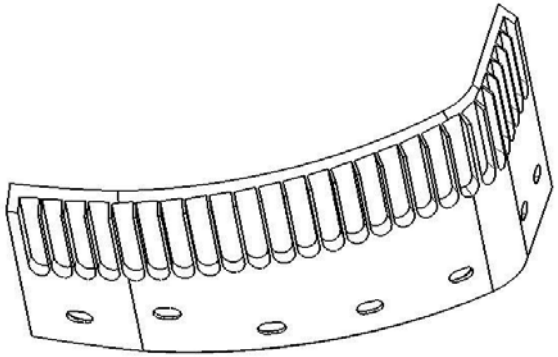

- **Methods and material:**
  - **CASE CX210 + harvesting head Kesla 25 RH II**
  - **Only on the first upper mobile knife**
  - **Ribbed blade fixed on a supporting knife**
  - **Time studies** (PMH5) **for 50 trees per configuration, and comparison with the original knife**

- **Five ribbed knives configurations:**

Knife type th_k-th_b-th_r-l_r	12-5-2-43	10-3-2-43	12-7-2-43	12-5-2-94	12-7-2-94
Productivity gain	8%	23%	40%	32%	32%

=> Results to be confirmed by additional experiments

Tests of ribbed knives in real productive conditions

Material and method

- **2 harvesters working in hardwood stands (oak, chestnut…):**
  - **CASE CX210 + harvesting head Kesla 25 RH II**
  - **John Deere 1170E + harvesting head H752**

- **1 year practice:**
  - **Comparison with the original knives**
  - **Different versions of the ribbed knives (NB: only 1 fix + 1 mobile ribbed knives for JD H752)**
  - **Time studies** (PMH5) **for 768 trees** (characterized by species and shape rating)
  - **Qualitative feedback from operators**

Positive feedback from drivers

- **Correct and close to trunk branch delimbing**
- **Processed logs in accordance with specifications**

- **Good robustness**
- **Good resistance of sharpening** (≥ original knives)

A gain on global productivity but not statistically significant

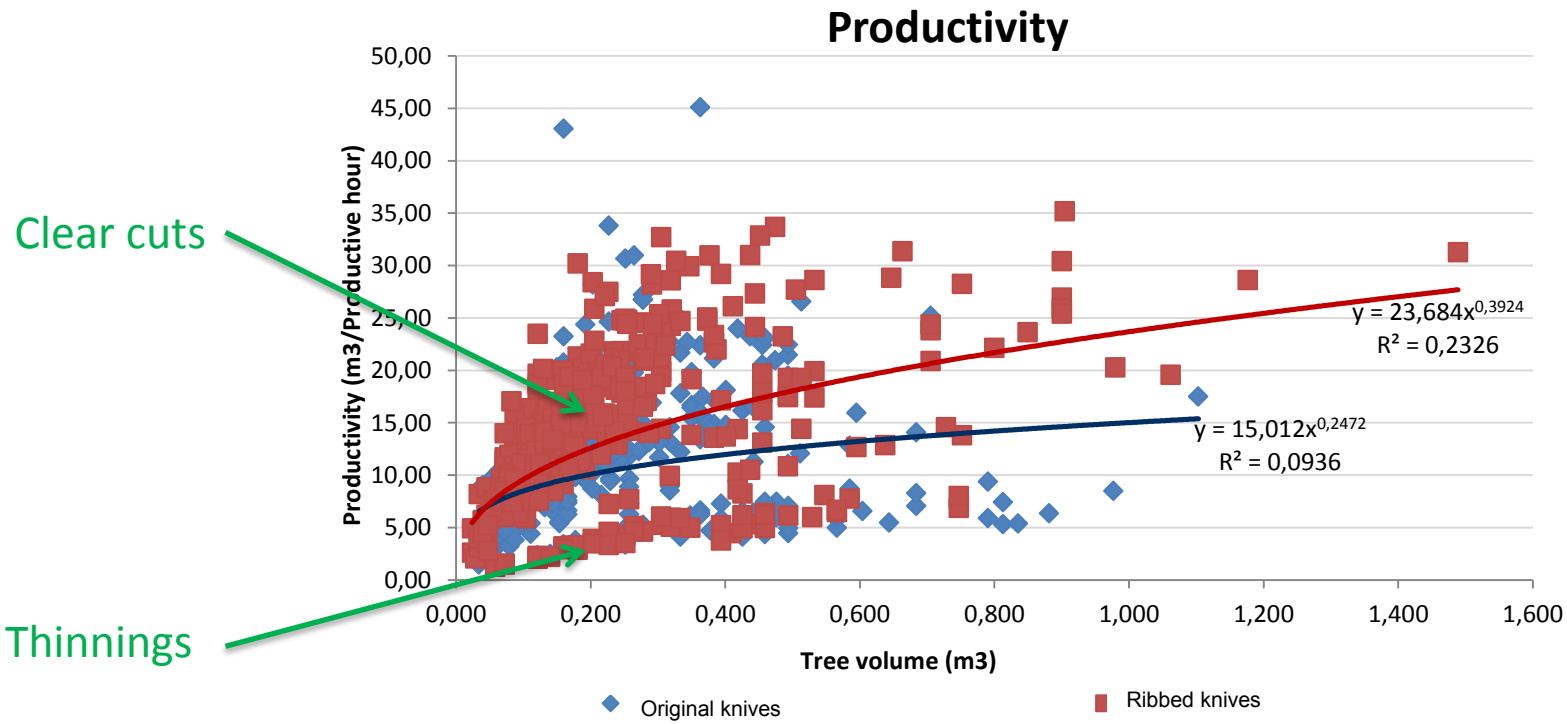

- **Whatever their shape, knives can only influence delimbing**
- **Many other parameters weight on harvesters' productivity in broadleaved stands**

Statistically significant results on sub-process productivity

- **Comparison between original and ribbed knives for the 2 harvesters** (based on sub-samples with trees having the same average volume, statistically significant difference, ANOVA-test):

		Case CX 210 + harvesting head Kesla 25 RH II		John Deere 1170E + harvesting head H752	
		Original knives	Ribbed knives	Original knives	Ribbed knives
Average stem volume (m^3)		0.151	0.150	0.286	0.284
Number of monitored trees		50	225	246	93
Productivity during tree process (m^3/PMH)	Min	11.0	10.2	3.9	7.7
	Max	54.2	69.4	82.8	94.6
	Moy	27.2	32.9	25.8	31.4
Gain on productivity			+21%		+21.7%

- **Tree processing**

  = delimbing + cross-cutting

  ≈ 50% of productive machine hour (PMH) in broadleaved stands

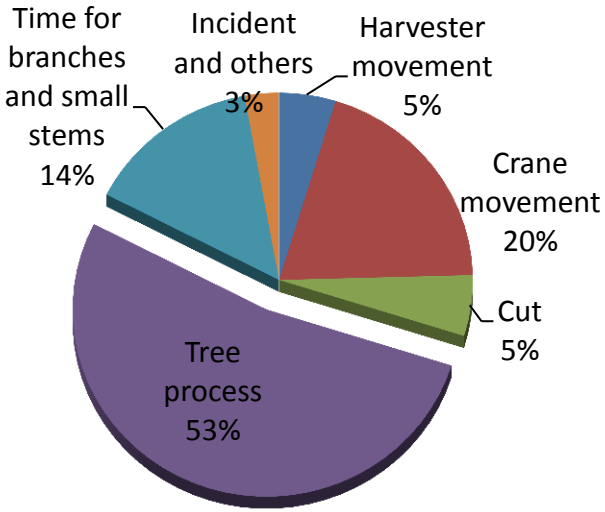

Influence of shape and species on sub-process productivity

Shape grade: from 0.5 (easy) to 3.5 (many difficulties, big branches)

- **+37% gains thanks to ribbed knives for trees shape-graded from 0.5 to 1.5** (statistically significant, ANOVA-test)
- **No significant difference over 1.75 shape grade** (but few monitored trees)
- **Better results with chestnut, birch and aspen than oak**

=> Because delimbing is shock-driven, larger and harder branches remain too tough to stomach for ribbed blades, although the upper limit of their capacity is higher than conventional knives'

Conclusion

Conclusion, discussion

- **Real productivity gains are reachable with ribbed knives for delimbing, despite the fact that for one harvester the delimbing ring was not totally ribbed**

- **Still on-going improvement and monitoring: new global shape for the knives, fully ribbed delimbing system, choice of the steel…**

- **Patented knives which can fit in any harvesting heads**

SHARPER

Thank you for your attention!

Questions?

Contact: emmanuel.cacot@fcba.fr

ECOMEF partners

ECOMEF funding

Innovative clusters